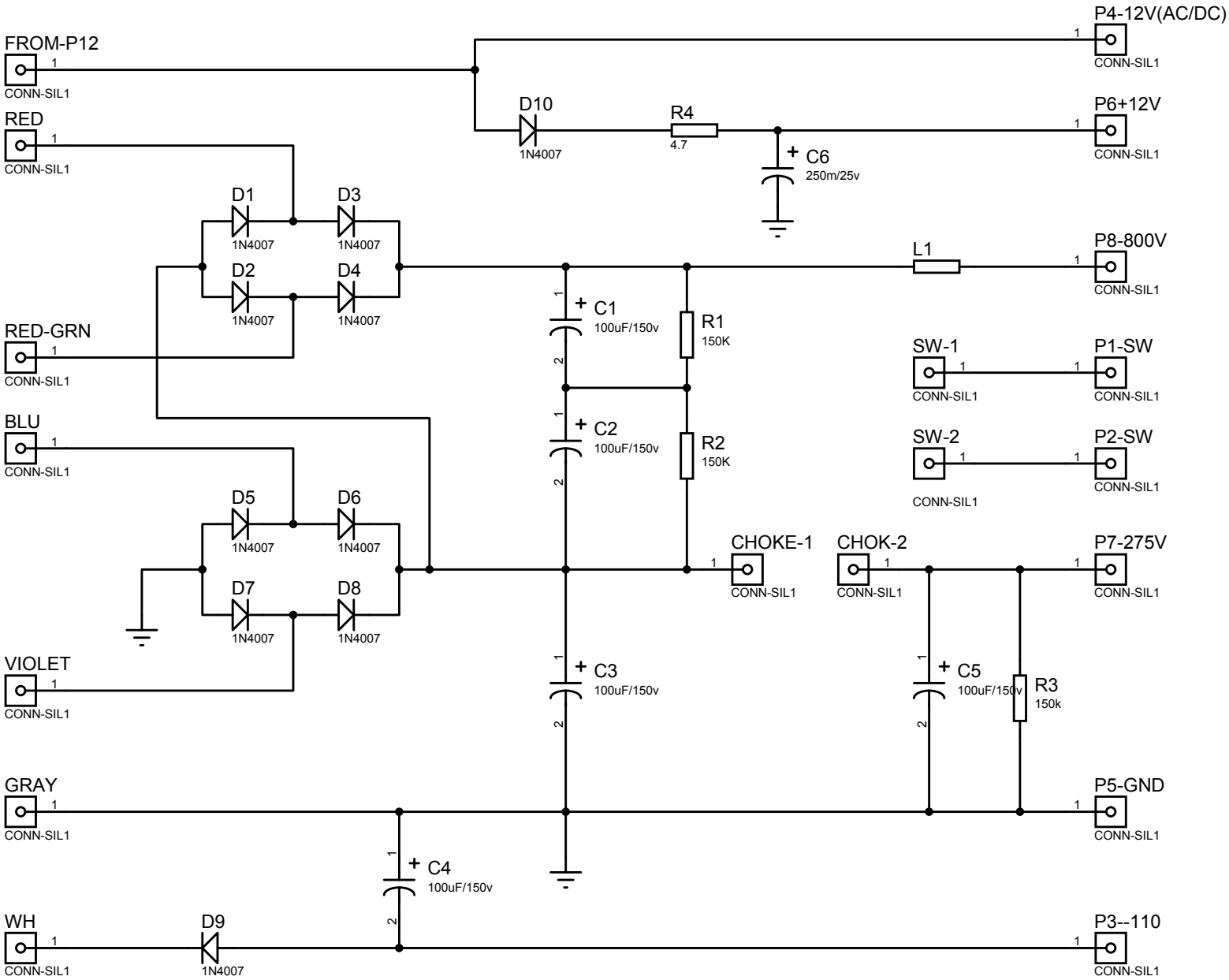
FROM-P12
CONN-SIL1
RED
CONN-SIL1
RED-GRN
CONN-SIL1
BLU
CONN-SIL1
VIOLET
CONN-SIL1
GRAY
CONN-SIL1
WH
CONN-SIL1
D1
1N4007
D2
1N4007
D3
1N4007
D4
1N4007
D5
1N4007
D6
1N4007
D7
1N4007
D8
1N4007
D9
1N4007
D10
1N4007
R4
4.7
C6
250m/25v
P4-12V(AC/DC)
CONN-SIL1
P6+12V
CONN-SIL1
L1
P8-800V
CONN-SIL1
C1
100uF/150v
R1
150K
C2
100uF/150v
R2
150K
C3
100uF/150v
C4
100uF/150v
SW-1
CONN-SIL1
P1-SW
CONN-SIL1
SW-2
CONN-SIL1
P2-SW
CONN-SIL1
CHOKE-1
CONN-SIL1
CHOK-2
CONN-SIL1
P7-275V
CONN-SIL1
C5
100uF/150v
R3
150k
P5-GND
CONN-SIL1
P3--110
CONN-SIL1